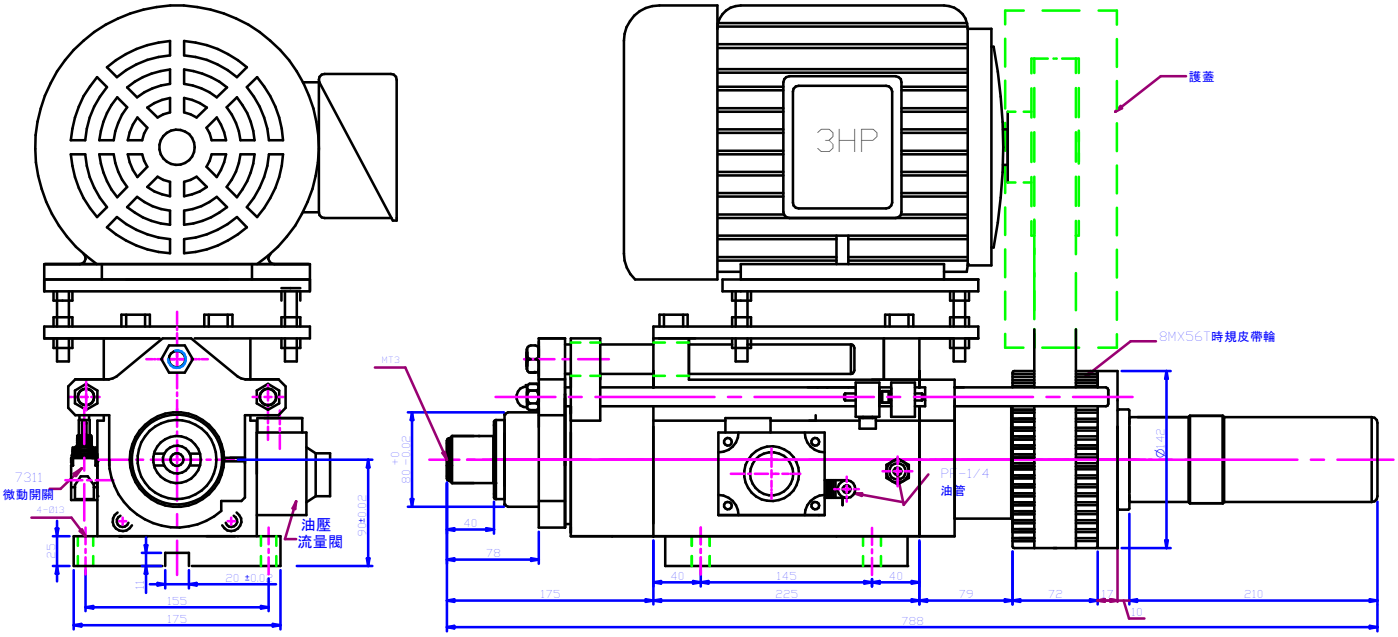

Operating Pressure	20~25kg/cm 2	Max. Speed	1,500 R.P.M	Cylinder Diameter	Ø110
Max. Drilling Capacity	Ø35(S45C)	Weight	82KG	Cylinder Area	Forward : 70.25CM 2
Spindle Taper	*NT-40/*MT-4/*ER40	Spindle Stroke	150M/M		Reverse : 31.4CM 2
Motor	2.2KW-2P,4P,6P	Breaking Stroke	Adjust By Flow Control Valve	Thrust	1405KG(20KG/CM) 2
				Spindle Speed	Optiona : 500RPM~1500RPM

Wearing Parts			
Spindle Bearing	32010X1,32009X1,6010VX1	Piston Seal	P-100X3,G-70X1
Pully Bearing	51213X1,6013ZZX1	Oil Seal -Back Cover	G-105×1,USH-55×1,DH-55×1,P55×1
Oil Seal - Front Cover	DH-90X1,P-90X2,G-105X2	Belt	8M Timing Belt
Limit Switch	7311X2		